REPAIR SHEET

BRAND		DESCRIPTION
RYOBI		**40 Volt Hedge Trimmer**
MODEL NO.	MFG. NO.	
RY40604VNM	**108617001**	

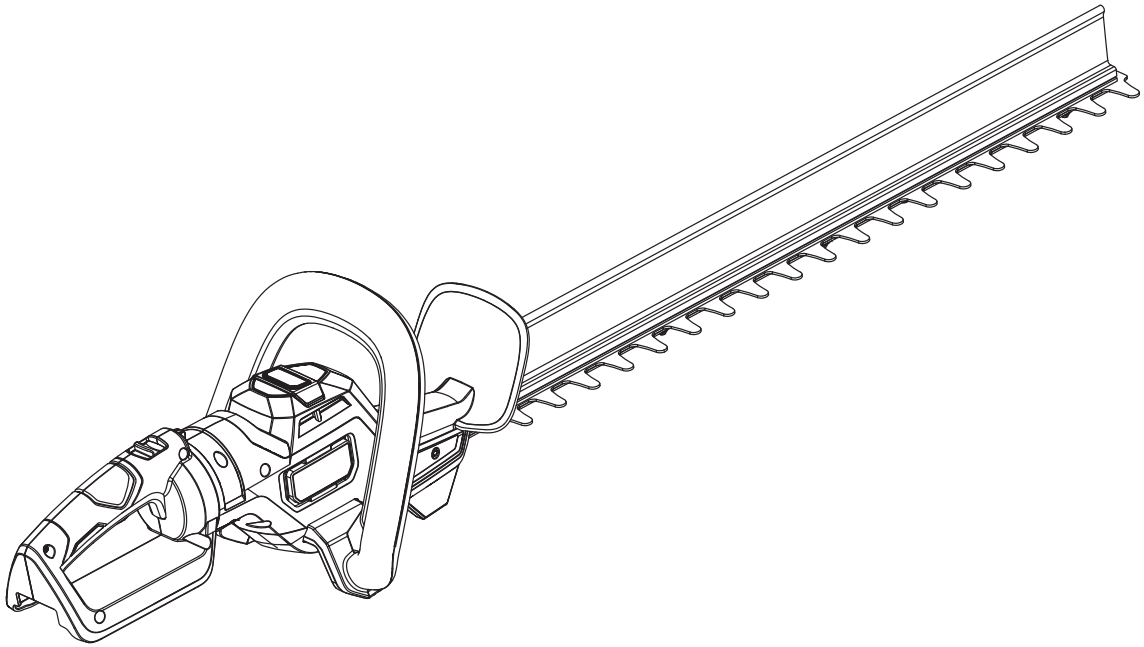

TTI OUTDOOR POWER EQUIPMENT, INC.
P.O. Box 1288, Anderson, SC 29622 ■ 1-800-525-2579 ■ **www.ryobitools.com**

1-14-22 (Rev:04)

The model number and manufacturing location will be found on a label attached to the product. Always mention this information in all communications regarding this product and when ordering parts.

RY40604VNM

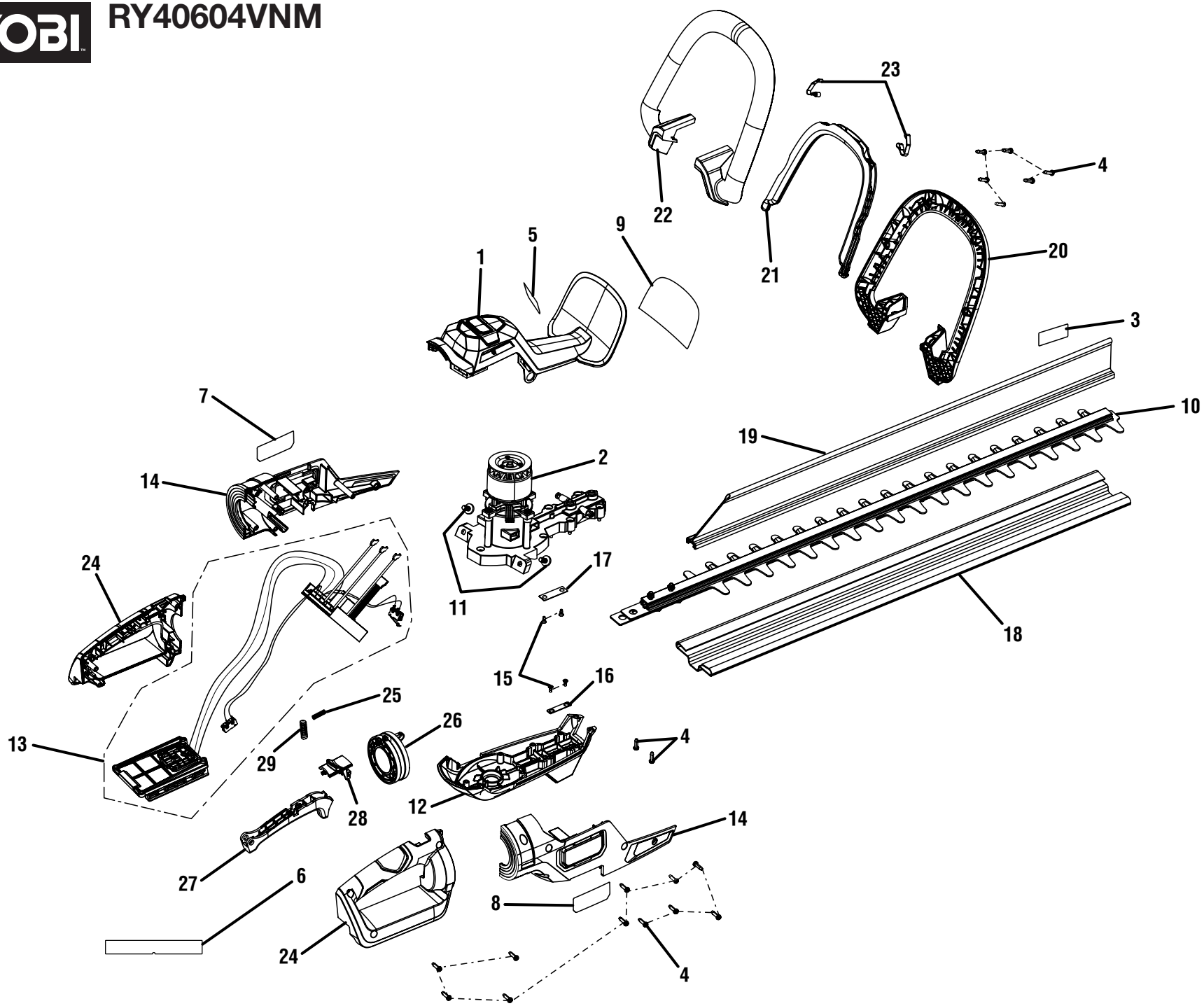
23
4
22
9
5
1
21
20
3
7
10
19
2
14
17
24
11
18
15
16
25
26
13
29
4
28
12
14
27
6
8
24
4

RY40604VNM

PARTS LIST

KEY NO.	PART NO.	DESCRIPTION	QTY.
1	317257001	Top Cover Assembly (Inc. Key Nos. 5 & 9)	1
2	317261001	Motor and Gear Box Assembly	1
3	941769001	Hedge Sweep Handle Warning Label	1
4	661817001	Screw (M4 x 13.5 mm, T15 Torx Pan Hd.)	19
5	941588781	40V HP Brushless Label	1
6	941588782	Rotating Handle Label	1
7	941588783	40V HP Logo Label	1
8	941588784	Data Label	1
9	941588785	Icons Warning Label	1
10	316865002	Blade Assembly	1
11	660299021	Screw (M5 x 13 mm, Pan Hd.)	2
12	542259001	Bottom Housing	1
13	317260001	Battery Foot and Switches Assembly	1
14	317258001	Motor Housing Assembly (Inc. Key Nos. 6-8)	1
15	660204004	Screw (M3 x 8 mm, Flat Hd.)	4
16	635609001	Flat Washer	1

KEY NO.	PART NO.	DESCRIPTION	QTY.
17	635610001	Flat Washer	1
18	525406008	Scabbard	1
19	317256001	Hedge Sweep Assembly (Inc. Key No. 3)	1
20	542261001	Assist Handle Front Half	1
21	542266001	Assist Handle Safety Trigger	1
22	542260001	Assist Handle Rear Half	1
23	639885001	Spring Plate	2
24	317259001	Rear Handle Assembly	1
25	679055012	Lock-Off Button Spring	1
26	542262001	Disk	1
27	542263001	Trigger	1
28	542265001	Lock-out Slider	1
29	679055014	Trigger Spring	1
	Not Shown:		
	998000364	Operator's Manual	

RY40604VNM

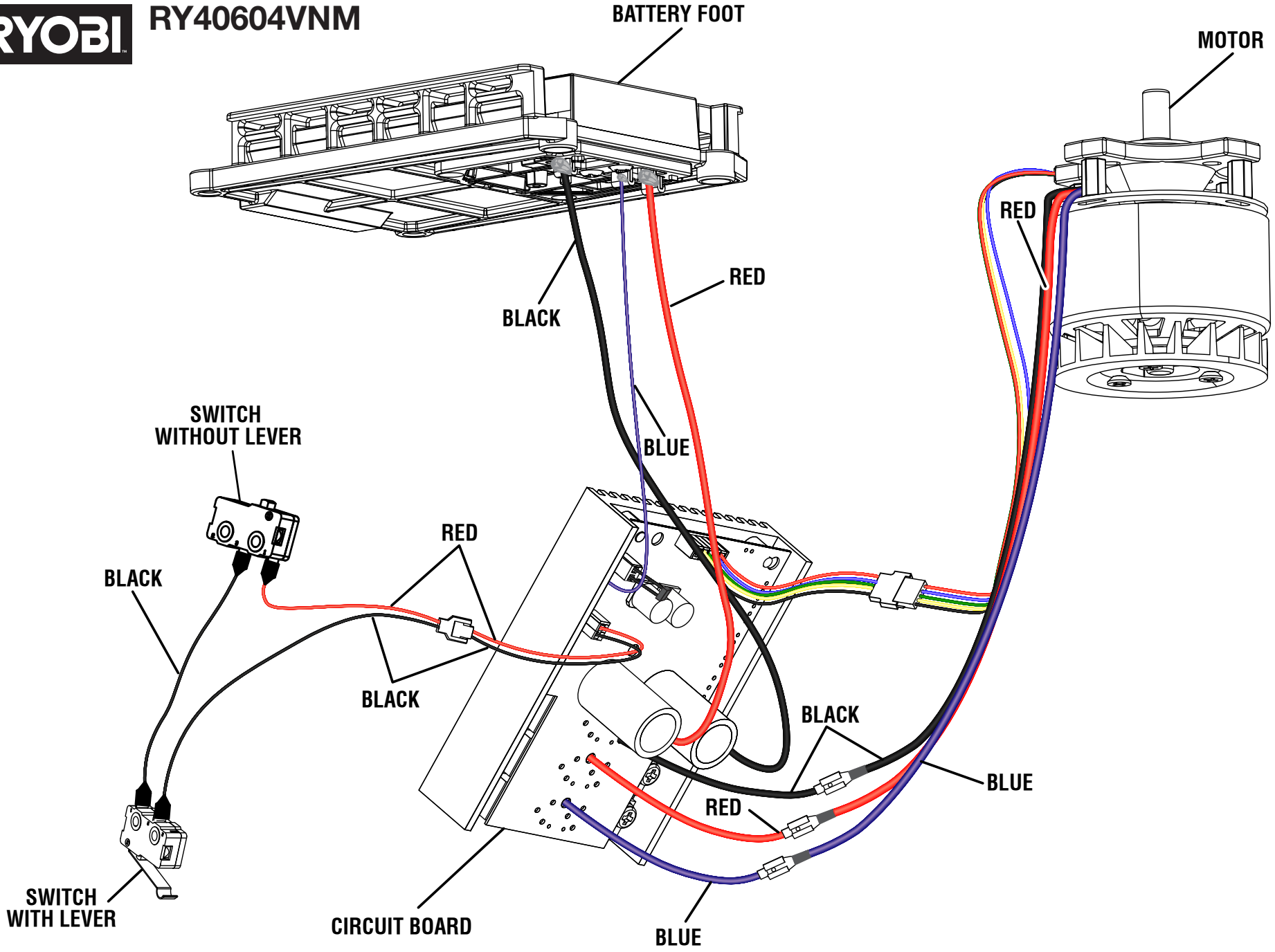

WIRING DIAGRAM