REPAIR SHEET

BRAND		DESCRIPTION
RYOBI		**40 Volt 20 in. Lawn Mower**
MODEL NO.	MFG. NO.	
RY401017VNM	**108753001**	

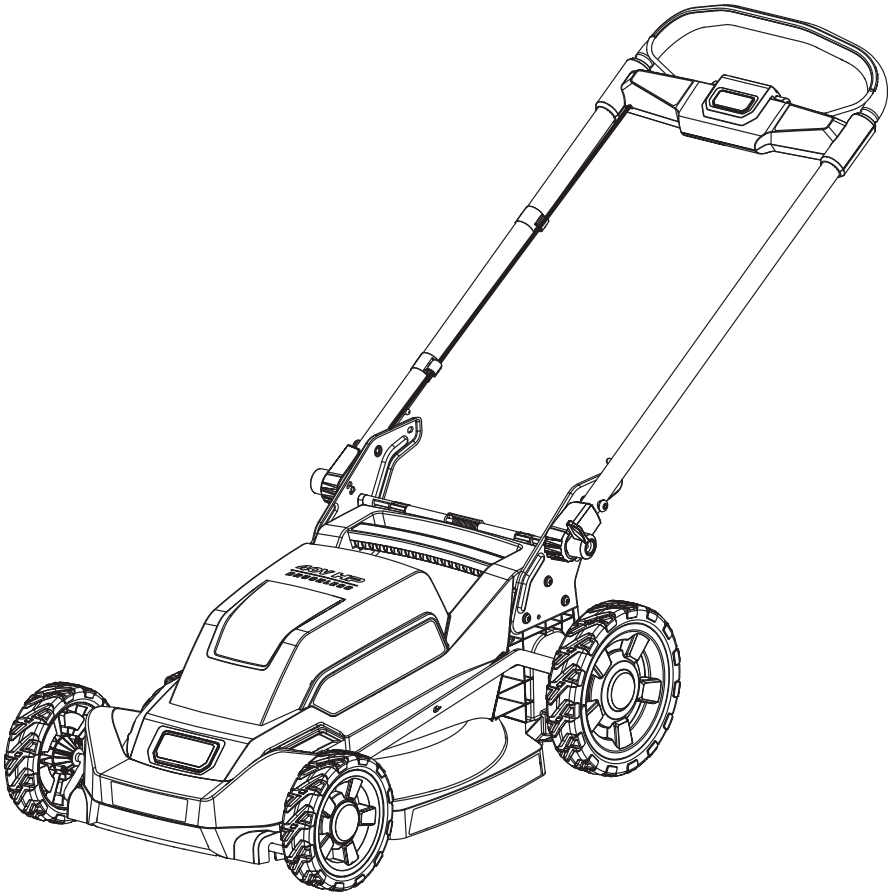

TTI OUTDOOR POWER EQUIPMENT, INC.

P.O. Box 1288, Anderson, SC 29622 ■ 1-800-525-2579 ■ **www.ryobitools.com**

1-18-22 (Rev:01)

The model number and manufacturing location will be found on a label attached to the product. Always mention this information in all communications regarding this product and when ordering parts.

RY401017VNM

FIGURE A

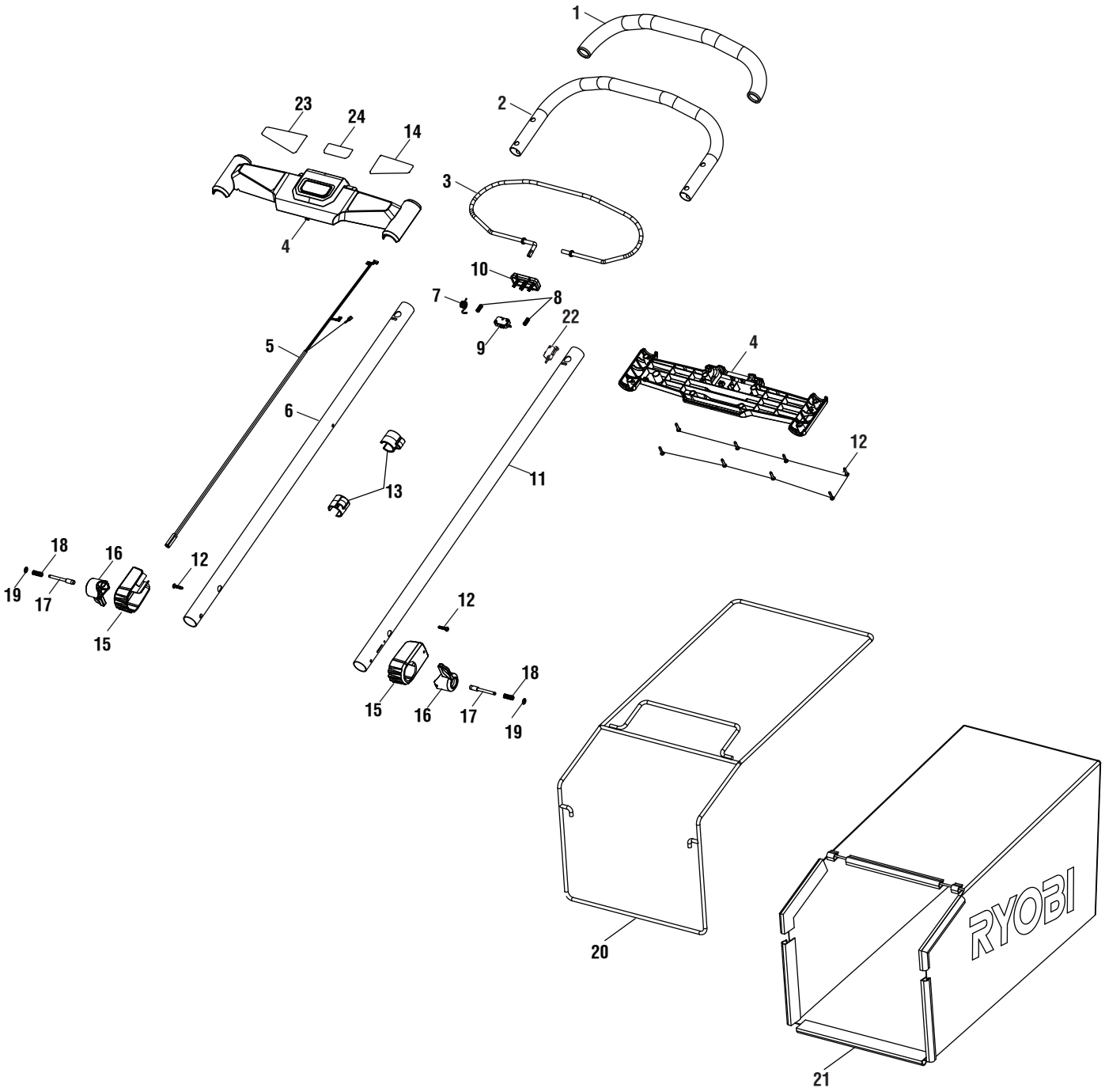

RY401017VNM

PARTS LIST — FIGURE A

KEY NO.	PART NO.	DESCRIPTION	QTY.
1	566234001	Handle Foam	1
2	699592001	Handle	1
3	699598001	Trigger	1
4	205798001	Upper Handle Assembly (Inc. Key Nos. 14 & 23-24)	1
5	292328001	Wire Assembly	1
6	699650001	Lower Tube	1
7	699605001	Bail Reset Spring	1
8	699704001	Spring	2
9	760689007	Micro On/Off Switch (15A)	1
	760689010	Micro On/Off Switch (6A)	1
10	543967001	Start Button	1
11	699649001	Lower Tube	1
12	661189003	Screw (M4 x 18 mm, T20 Torx Pan Hd.)	10
13	544302001	Cord Retainer	2

KEY NO.	PART NO.	DESCRIPTION	QTY.
14	940779407	Upper Handle Label (Right)	1
15	543971001	Adjustment Knob Bushing	2
16	543972001	Adjustment Knob	2
17	674293001	Detent Pin	2
18	694490001	Detent Pin Spring	2
19	659472001	Retaining Ring	2
20	699601001	Grass Catcher Frame	1
21	317926001	Grass Catcher	1
22	760551001	Switch	1
23	940779406	Upper Handle Label (Left)	1
24	940705544	Logo Label	1
	Not Shown:		
	998000751	Operator's Manual	

RY401017VNM

FIGURE B

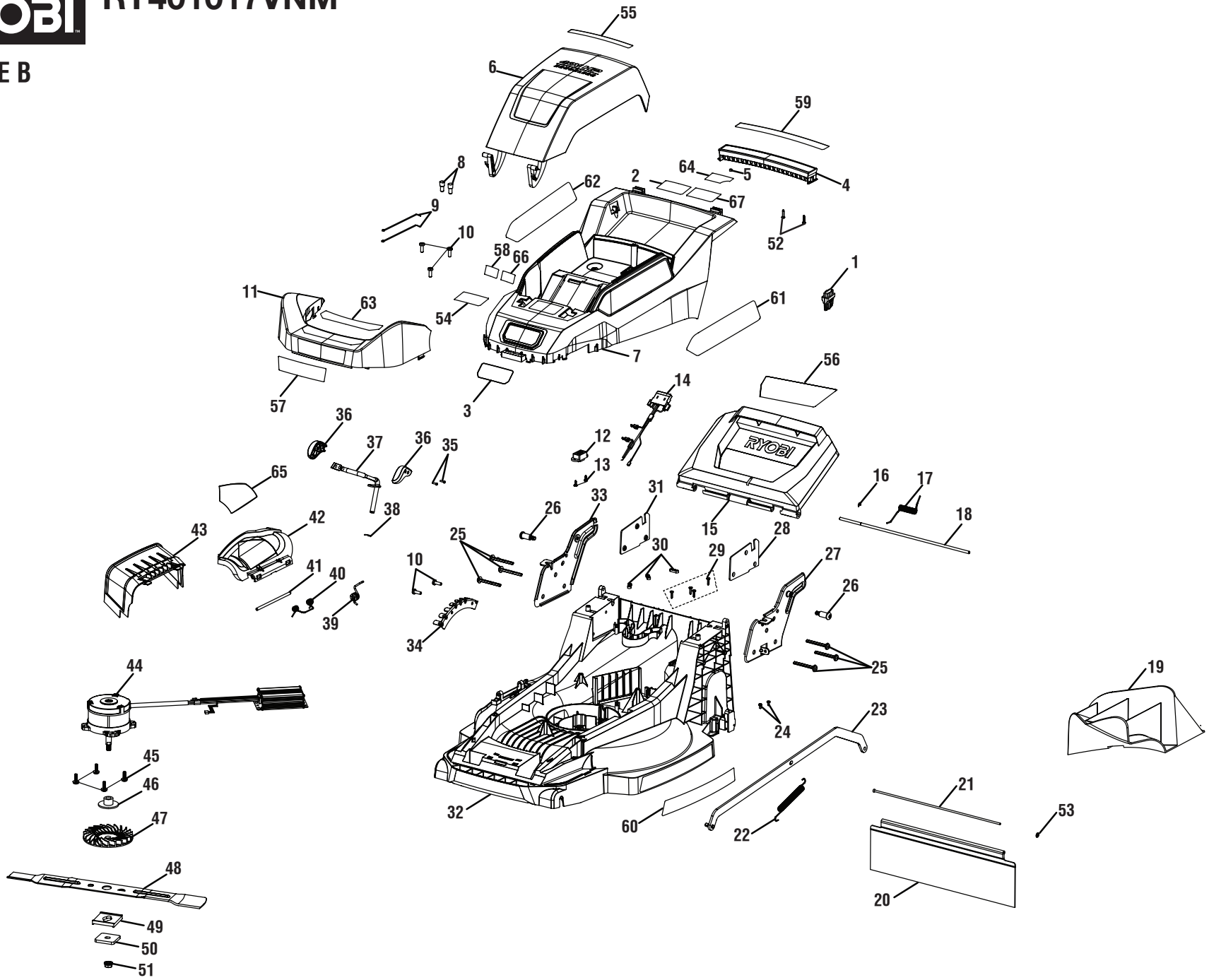

RY401017VNM

PARTS LIST — FIGURE B

KEY NO.	PART NO.	DESCRIPTION	QTY.
1	311280001	Key Assembly	1
2	940779503	Battery Wet Conditions Label	1
3	940705552	Logo Label	1
4	205805001	Carry Handle (Inc. Key No. 59)	1
5	613717001	Door Magnet	1
6	205803001	Battery Cover (Inc. Key No. 55)	1
7	205794001	Top Housing (Inc. Key Nos. 2-3, 7, 54, 58, 62 & 66-67)	1
8	870601002	Close-End Connector	2
9	790055001	Cable Tie	2
10	664004001	Screw (1/4-15 x .75 mm, T30 Torx Pan Hd.)	5
11	205800001	Front Fender (Inc. Key Nos. 57 & 63)	1
12	526912001	Key Connector Base	1
13	660608001	Screw (M4 x 12 mm, T20 Torx Pan Hd.)	2
14	292012002	Inner Wire Without Terminal	1
15	205802001	Rear Door (Inc. Key No. 56)	1
16	680260001	E-Ring	1
17	699832001	Rear Door Torsion Spring	1
18	622946001	Rear Door Shaft	1
19	544164001	Mulching Plug	1
20	535475001	Trailing Sheet	1
21	699702001	Trailing Sheet Rod	1
22	695152001	Retention Spring	1
23	656079001	Connecting Bar	1
24	660925011	Screw (M4 x 8 mm)	2
25	663155001	Screw (M6 x 64 mm, T30 Torx Pan Hd.)	6
26	663149001	Screw w/Shoulder (M8 x 35.7 mm, T45 Torx Pan Hd.)	2
27	674279001	Handle Bracket (Left)	1
28	656134001	Handle Bracket Nut Plate	1
29	660608002	Screw (M4 x 16.5 mm, T20 Torx Pan Hd.)	4

KEY NO.	PART NO.	DESCRIPTION	QTY.
30	513211001	Cord Clip	3
31	656136001	Right Handle Bracket Nut	1
32	543911001	Deck (Inc. Key No. 60)	1
33	674280001	Right Handle Bracket	1
34	656663001	Height Adjustment Plate	1
35	660004019	Screw (M3 x 12 mm, Pan Hd.)	2
36	205804001	Height Adjustment Knob Assembly	1
37	699604001	Height Adjustment Rod	1
38	679044001	E-Ring	1
39	699669001	Height Adjustmen Rod Torsion Spring	1
40	699603001	Side Discharge Cover Torsion Spring	1
41	622893001	Side Discharge Shaft Cover	1
42	205801001	Side Discharge (Inc. Key No.65)	1
43	543958001	Side Discharge Chute	1
44	292146004	Push Mower Controller Assembly	1
	292146005	Push Mower Controller Assembly	1
45	663156001	Screw (M6 x 1 mm, T30 Torx Pan Hd.)	4
46	613427001	Motor Axle Bushing	1
47	544676001	Motor Fan Blade Adapter	1
48	656080003	20 in. Blade	1
49	526920003	Spacer	1
50	639118002	Blade Spacer Plate	1
51	679075001	Blade Nut (M10 x 1.25 mm)	1
52	661189003	Screw (M4 x 18 mm, T20 Torx Pan Hd.)	2
53	659472001	Retaining Ring	1
54	941588964	Data Label (TUV)	1
	941588965	Data Label (UL)	1
55	940779395	Icon Label	1
56	940779396	Danger Label (Bagger Door)	1

PARTS LIST — FIGURE B

KEY NO.	PART NO.	DESCRIPTION	QTY.
57	940779398	3-In-1 Front Label	1
58	940779399	Battery Storage Label	1
59	940779400	Carry Handle Accent Label	1
60	940779401	Deck 20in Side Label	1
61	940779402	Brushless Logo Label	1
62	940779403	Brushless Logo Label	1

KEY NO.	PART NO.	DESCRIPTION	QTY.
63	940779404	Push Front Bumper Label	1
64	940779405	Qr Code Label	1
65	941641001	CPSC Hands Label	1
66	940779476	Start Key Label (Spanish)	1
67	940779475	Start Key Label (French)	1

RY401017VNM

FIGURE C

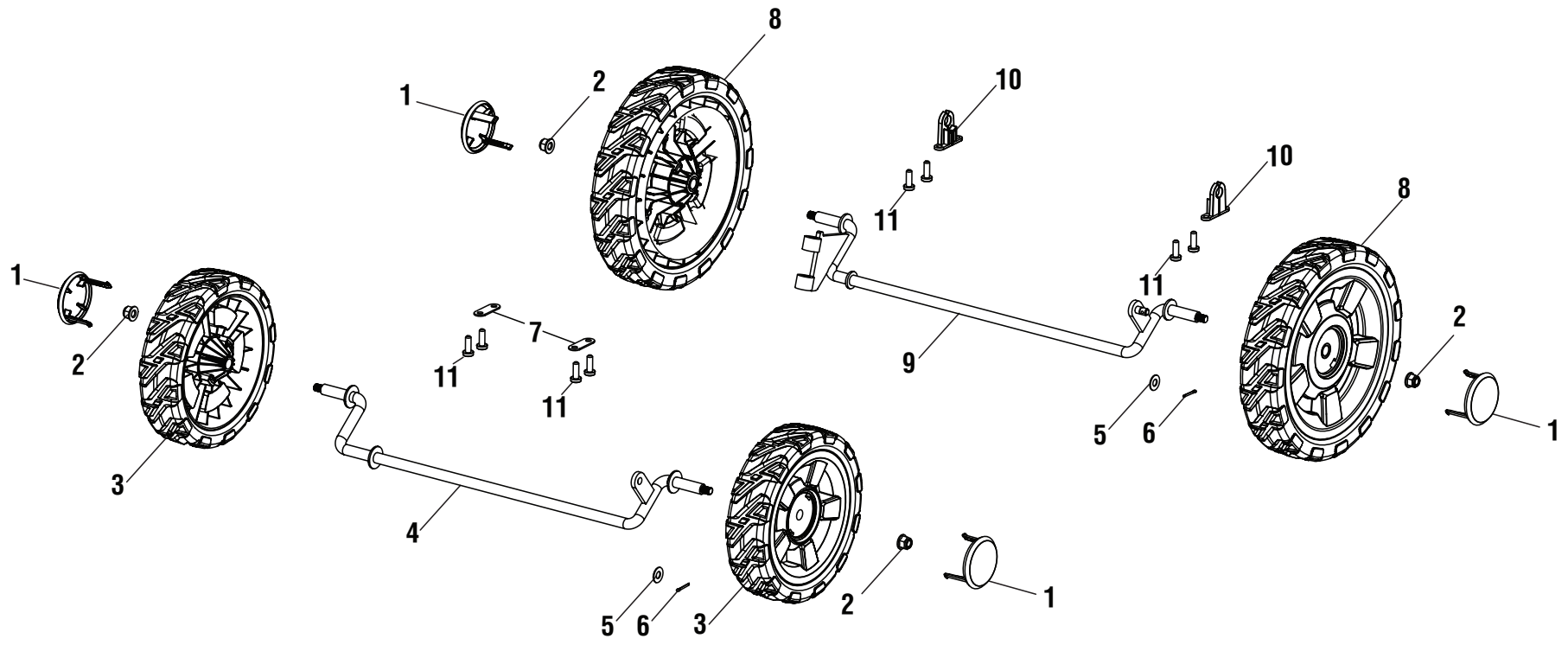

PARTS LIST — FIGURE C

KEY NO.	PART NO.	DESCRIPTION	QTY.
1	542861001	Wheel Hub Cap	4
2	678774012	Flange Nut (M8 X 1.25 mm)	4
3	317161004	8 in. Wheel	2
4	699599001	Front Wheel Axle	1
5	639013001	Flat Washer (ID 8.4 x OD18 x 1t)	2
6	678279004	Cotter Pin	2

KEY NO.	PART NO.	DESCRIPTION	QTY.
7	639116012	Front Axle Press Plate	2
8	317159006	10 in. Wheel w/Bushing Assembly	2
9	699600001	Rear Wheel Axle	1
10	544872001	Rear Axle Mount Plate Bushing	2
11	664004001	Screw (1/4-15 x .75 mm, T30 Torx Pan Hd.)	8

RY401017VNM
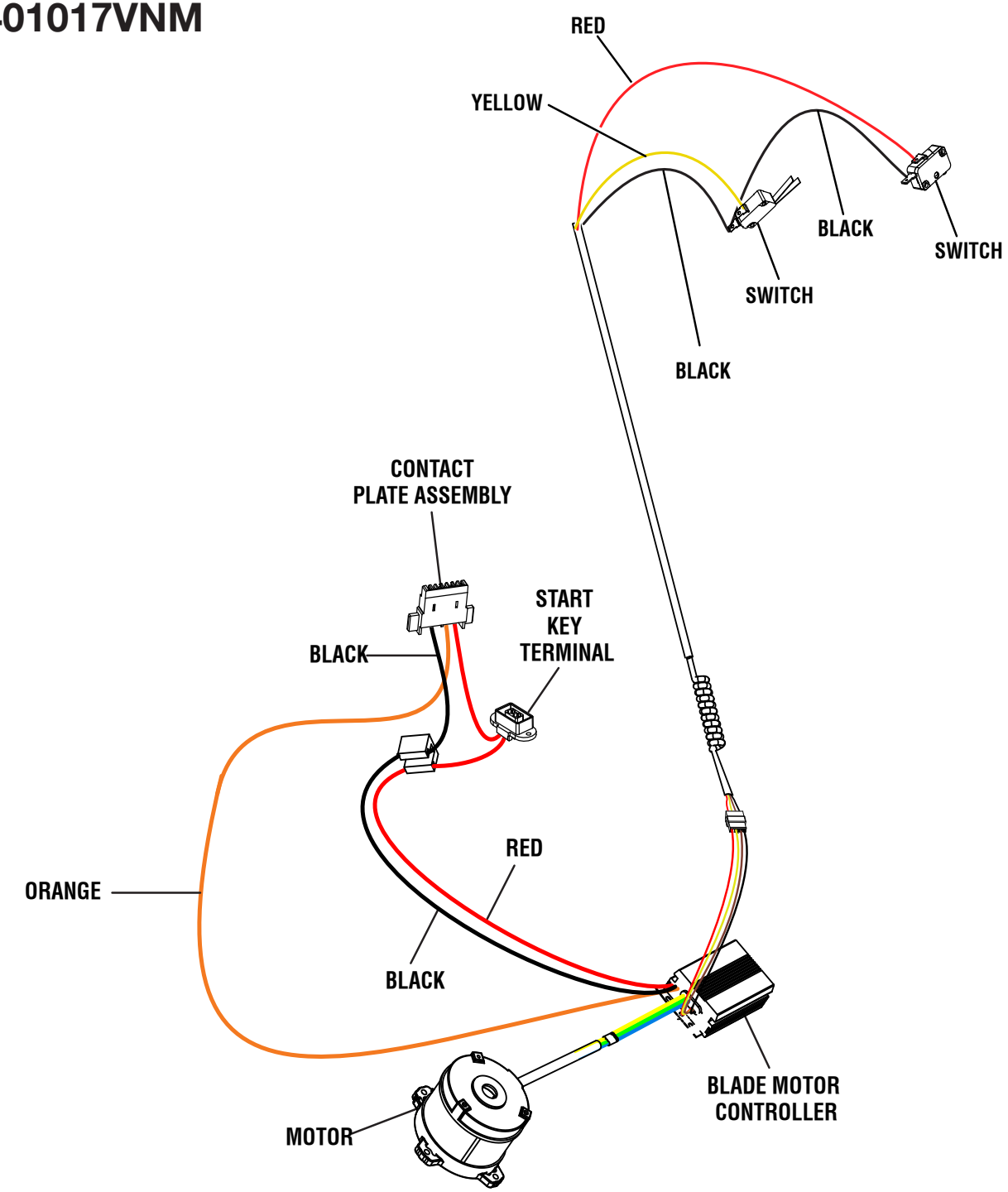
WIRING DIAGRAM