REPAIR SHEET

BRAND

RYOBI

MODEL NO.

RY40006VNM

MFG. NO.

314778102

DESCRIPTION

40 Volt Power Head

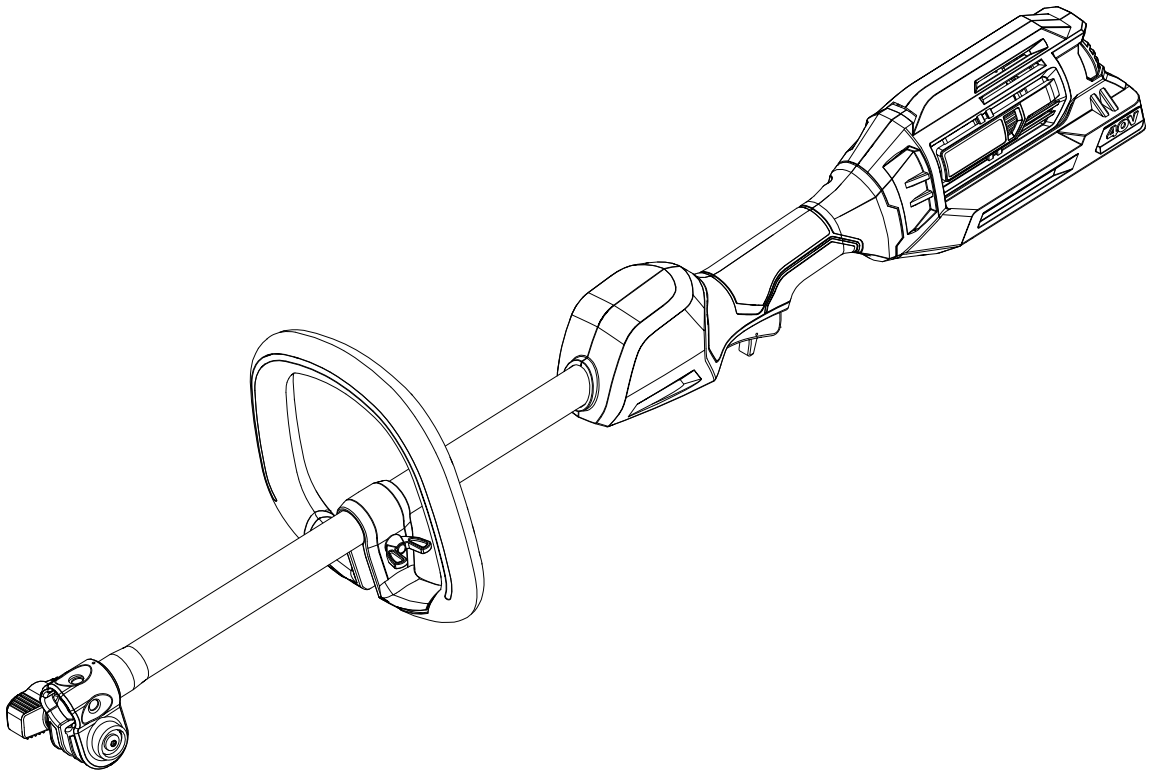

TTI OUTDOOR POWER EQUIPMENT, INC.
P.O. Box 1288, Anderson, SC 29622 ■ 1-800-525-2579 ■ **www.ryobitools.com**

7-5-22 (Rev:02)

The model number and manufacturing location will be found on a label attached to the product. Always mention this information in all communications regarding this product and when ordering parts.

RY40006VNM

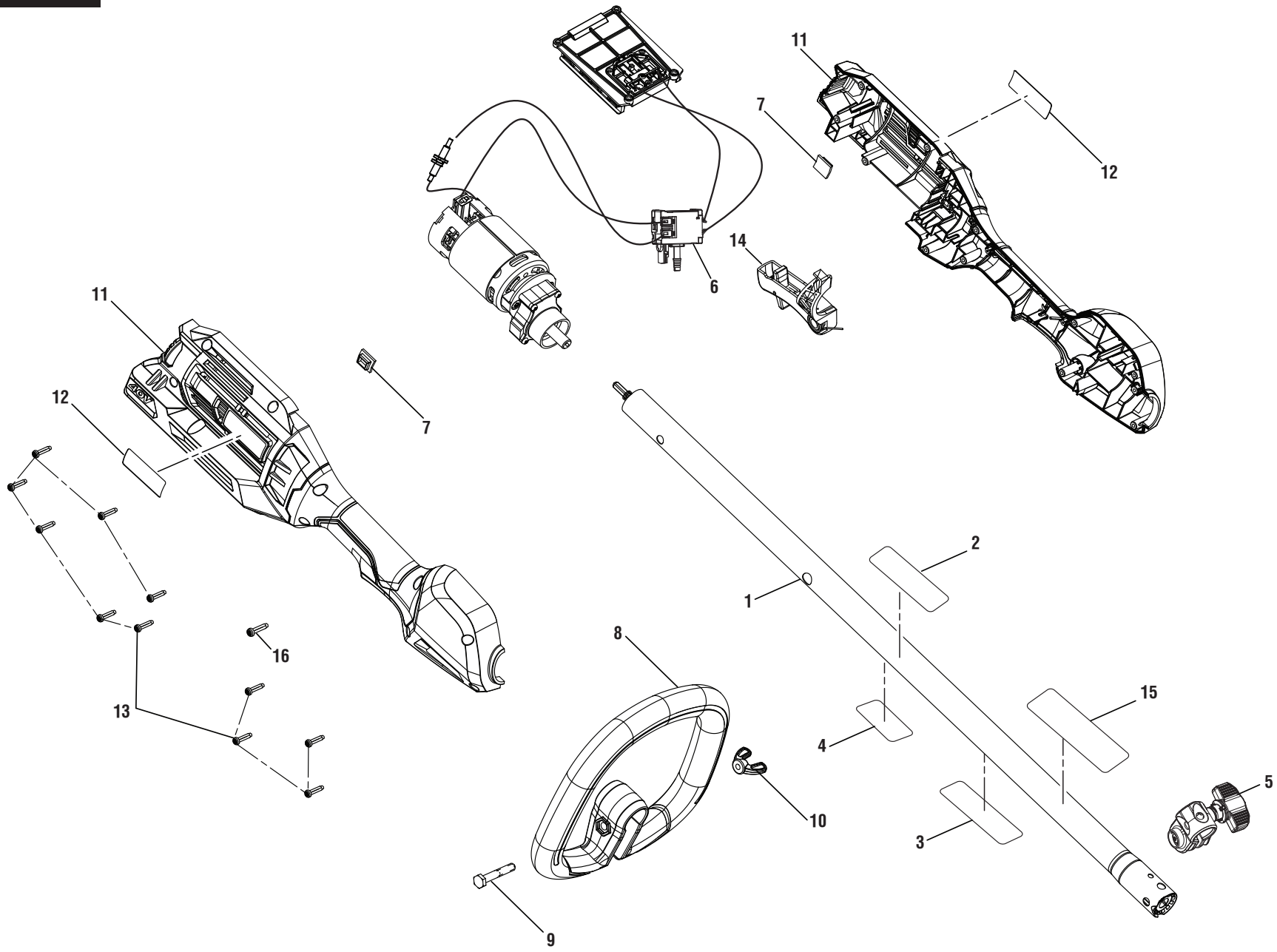

RY40006VNM

PARTS LIST

KEY NO.	PART NO.	DESCRIPTION	QTY.
1	317463001	Boom Assembly (Inc. Key Nos. 2-4 & 15)	1
2	941013004	Warning Icon Label	1
3	941013005	Warning Label (French/Spanish)	1
4	941588686	Data Label	1
5	315386001	Boom Clamp Assembly	1
6	317464001	Motor, Gear Box, Switch & Contact Plate Assembly	1
7	570115001	Rubber Plate	2
8	308991003	Front Handle Assembly (Inc. Key Nos. 9-10)	1
9	660643008	Screw (1/4-20 x 40 mm, Hex Hd.)	1
10	518949001	Wing Nut (1/4-20)	1
11	314830001	Rear Handle Assembly (Inc. Key No. 12)	1
12	940705432	Logo Label	2
13	661864007	Screw (M4 x 18 mm, T15 Torx Pan Hd.)	11
14	205499002	Switch Trigger Assembly	1
15	941851150	Attachment Label	1
16	660031017	Screw (M3.5 x 16 mm, T10 Torx Pan Hd.)	1
	Not Shown:		
	995000659	Operator's Manual	

RY40006VNM

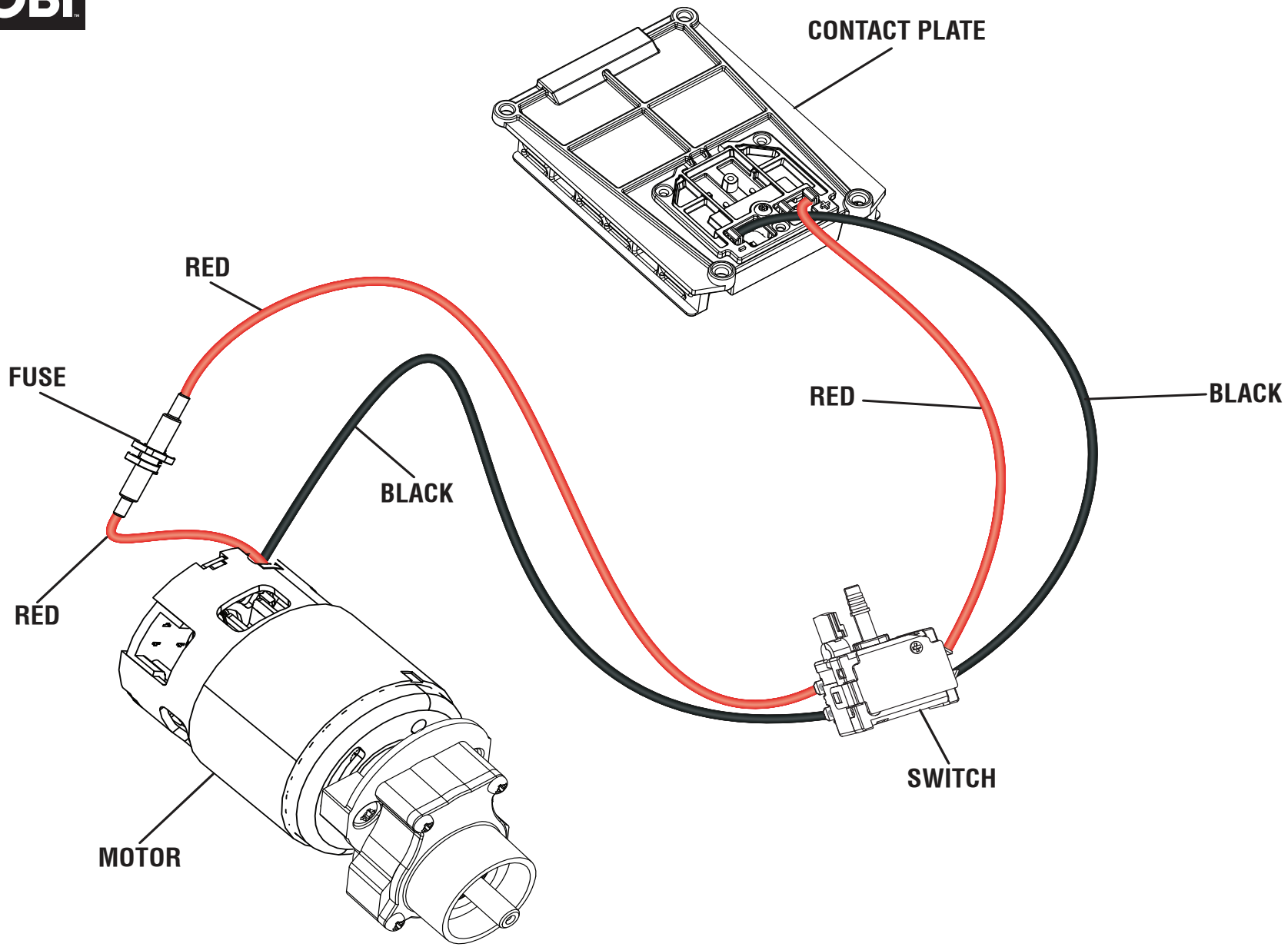

WIRING DIAGRAM