REPAIR SHEET

BRAND		DESCRIPTION
RYOBI		**18 Volt Pruning Chain Saw**
MODEL NO.	MFG. NO.	
P5452	**107548001**	

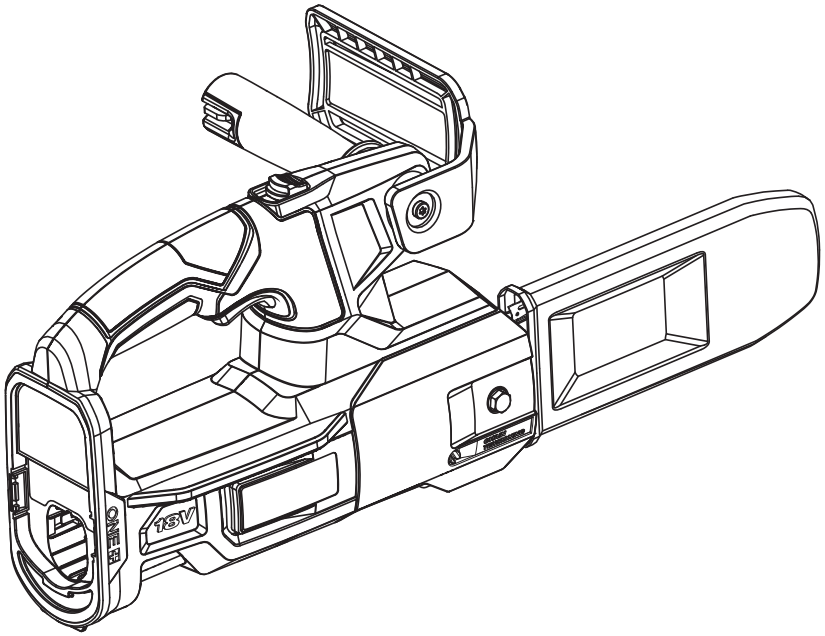

TECHTRONIC INDUSTRIES POWER EQUIPMENT
P.O. Box 1288, Anderson, SC 29622 ■ 1-800-525-2579 ■ **www.ryobitools.com**

5-10-21 (Rev:02)

The model number and manufacturing location will be found on a label attached to the product. Always mention this information in all communications regarding this product and when ordering parts.

RYOBI P5452

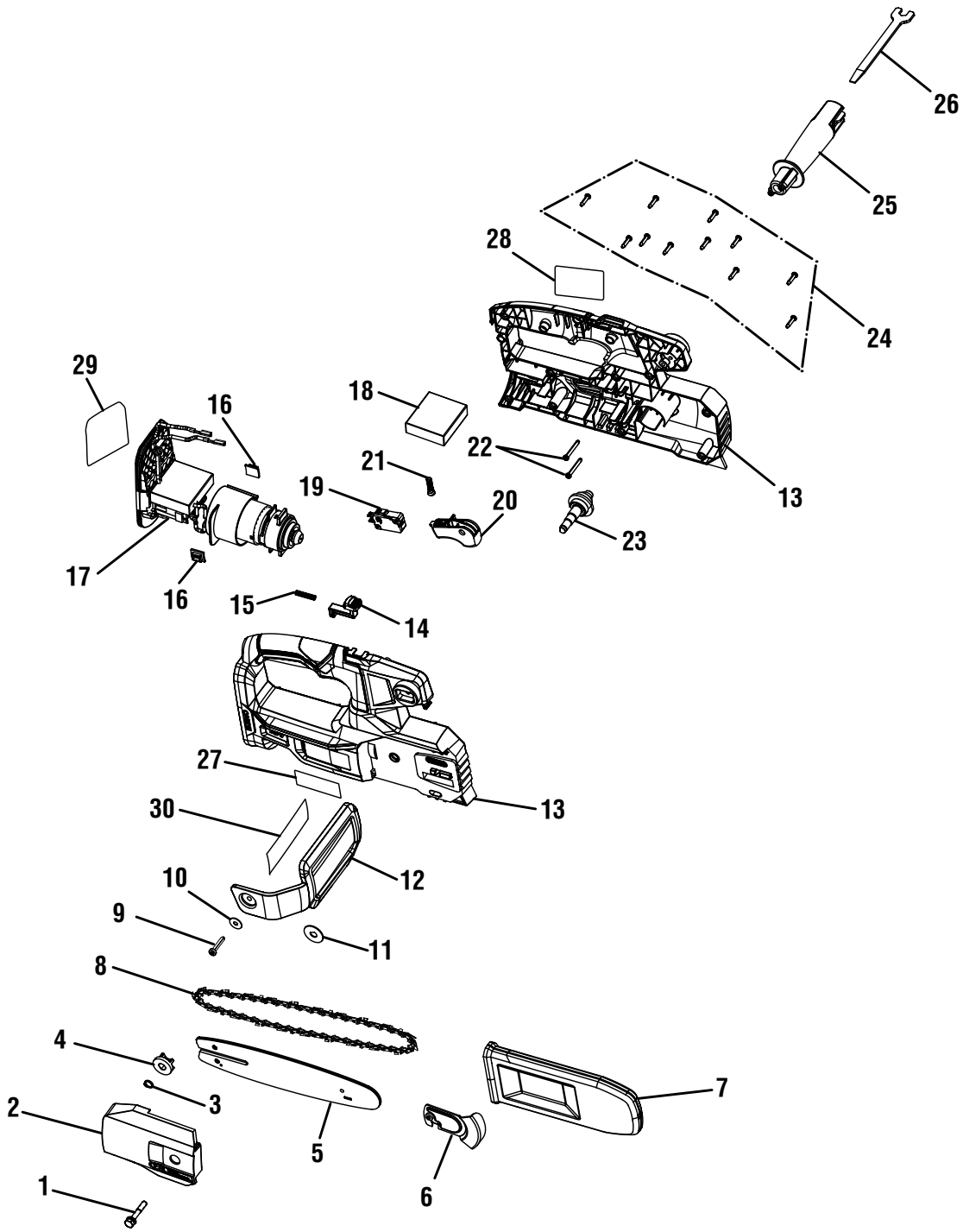
26
25
28
24
29
16
18
22
21
19
20
13
23
17
16
15
14
27
13
30
12
10
9
11
8
4
7
3
2
5
6
1

RYOBI P5452

PARTS LIST

KEY NO.	PART NO.	DESCRIPTION	QTY.
1	663095001	Screw with Spring Washer (M6 x 35 mm)	1
2	316689001	Sprocket Cover Assembly	1
3	670608002	Retaining Ring	1
4	610323001	Sprocket	1
5	316670001	Guide Bar	1
6	205436001	Safety Tip Assembly	1
7	580788001	Scabbard	1
8	682502001	8 in. Saw Chain	1
9	662053001	Screw (#10-14 x 1 in., T25 Torx Hd.)	1
10	671072001	Flat Washer	1
11	690733001	Cover Plate	1
12	205422001	Front Guard Assembly (Inc. Key No. 30)	1
13	205434001	Housing Assembly (Inc. Key Nos. 27-28)	1
14	541725002	Lock-Off	1
15	694143001	Lock Spring	1
16	570115001	Rubber Plate	2

KEY NO.	PART NO.	DESCRIPTION	QTY.
17	205435001	Motor, Gear Box, and Battery Foot Assembly (Inc. Key No. 29)	1
18	699228001	Balance Plate	1
19	760745001	On/Off Switch	1
20	541724002	Trigger	1
21	679973003	Trigger Spring	1
22	660208104	Screw (M4 x 30 mm, T15 Torx Pan Hd.)	2
23	316943001	Output Shaft Assembly	1
24	662028001	Screw (M4 x 15.5 mm, T15 Torx Pan Hd.)	11
25	205423001	Front Handle Assembly	1
26	639255002	Wrench	1
27	941588720	Logo Label	1
28	941588717	Warning Label	1
29	941588719	Data Label	1
30	941041004	Icon Warning Label	1
	Not Shown:		
	998000269	Operator's Manual	

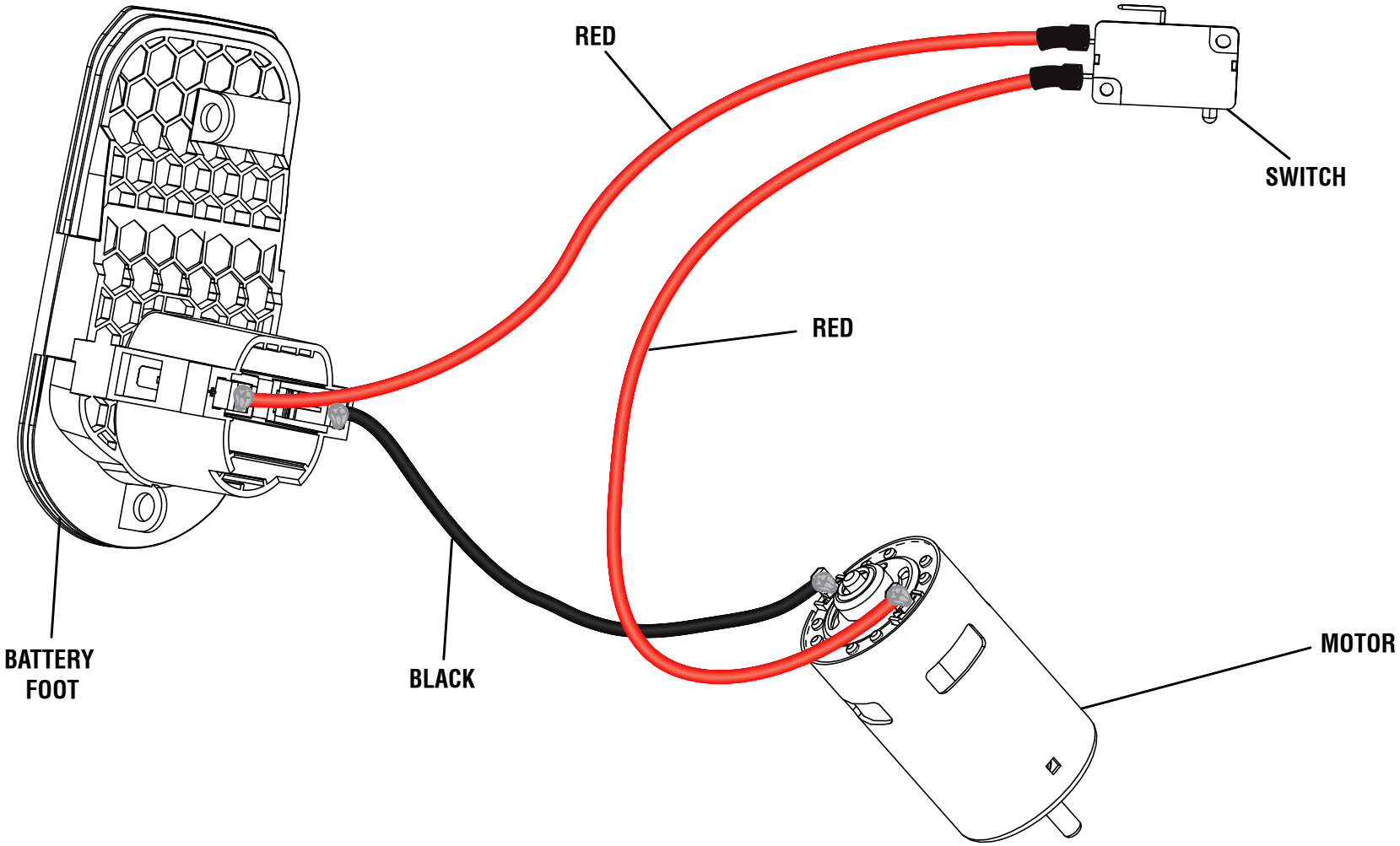

WIRING DIAGRAM