REPAIR SHEET

BRAND		DESCRIPTION
RYOBI		**18 Volt Backpack Sprayer**
MODEL NO.	MFG. NO.	
P2806	**107450001**	
P2806VNM	**107450101**	

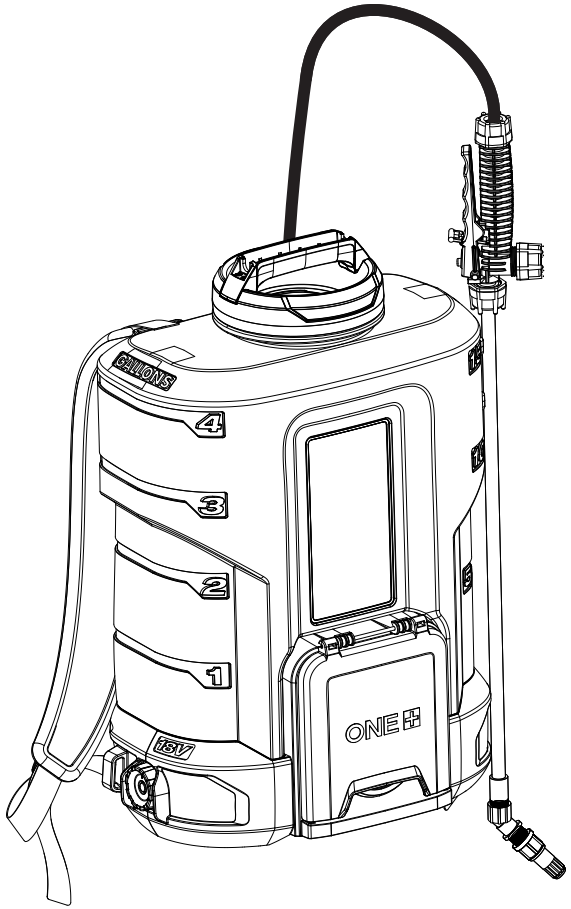

TECHTRONIC INDUSTRIES POWER EQUIPMENT
P.O. Box 1288, Anderson, SC 29622 ■ 1-800-525-2579 ■ **www.ryobitools.com**

7-30-21 (Rev:05)

The model number and manufacturing location will be found on a label attached to the product. Always mention this information in all communications regarding this product and when ordering parts.

P2806/P2806VNM

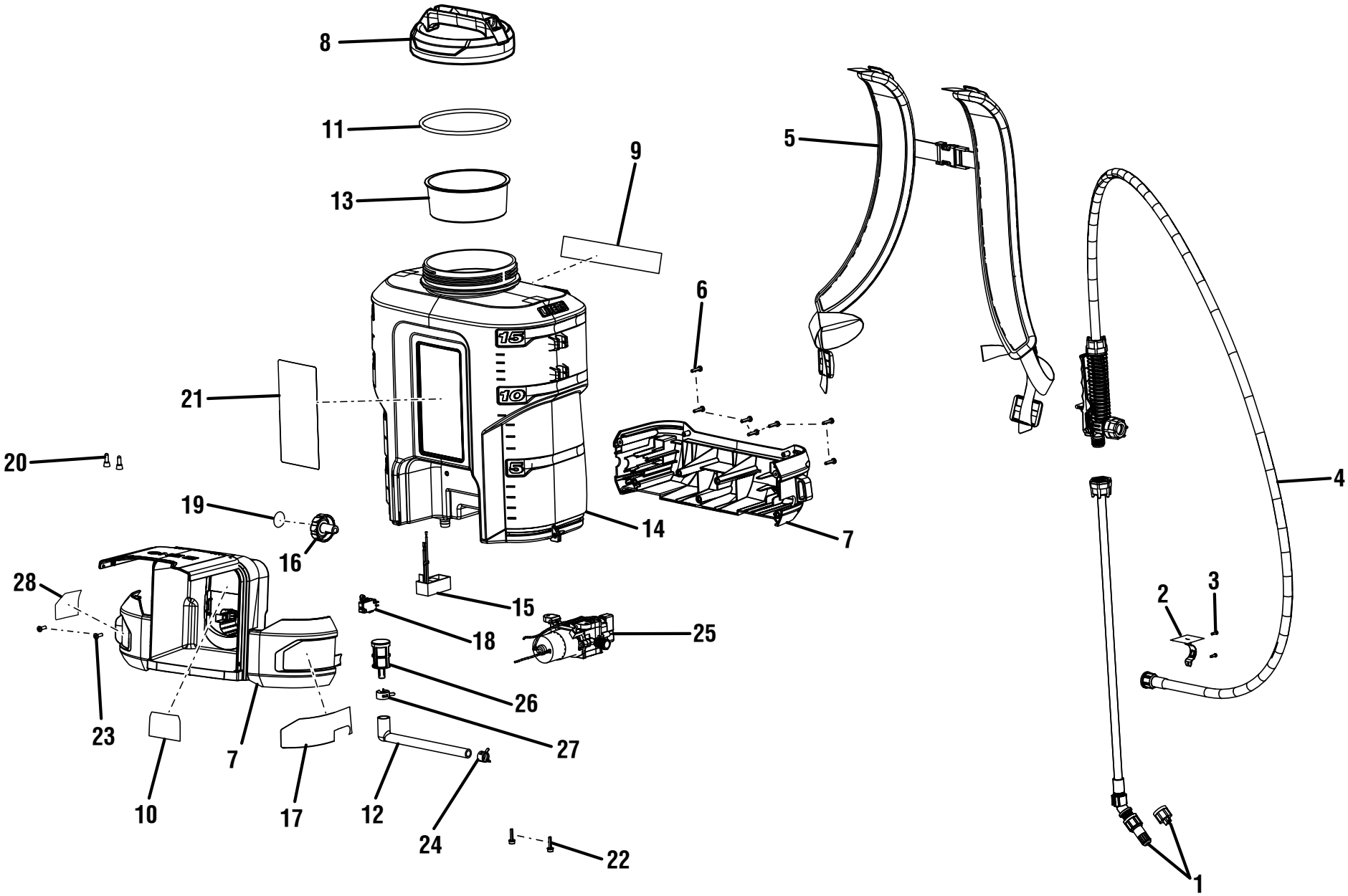

P2806/P2806VNM

PARTS LIST

KEY NO.	PART NO.	DESCRIPTION	QTY.
1	313969003	Nozzle and Wand Assembly	1
2	659603001	Fastener	1
3	660230011	Screw (M3 x 10 mm, T10 Torx Pan Hd.)	2
4	316622001	Handle and Hose Assembly	1
5	316455001	Straps	1
6	660208049	Screw (M4 x 22 mm, Pan Hd.)	7
7	317225001	Housing Assembly (Inc. Key Nos. 10, 17 & 28, P2806)	1
	318350001	Housing Assembly (Inc. Key Nos. 10, 17 & 28, P2806VNM)	1
8	317226001	Tank Lid Assembly (Inc. Key No. 11)	1
9	941015098	Icon Warning Label	1
10	941588779	Data Label (P2806)	1
	941588851	Data Label (P2806VNM)	1
11	566002001	Rubber Gasket	1
12	541717001	Tube	1
13	541716001	Inlet Filter	1
14	317227001	Tank Assembly (Inc. Key Nos. 9 & 21)	1

KEY NO.	PART NO.	DESCRIPTION	QTY.
15	317228001	Flow Rate Control Assembly	1
16	317230001	Adjustable Switch Knob Assembly (Inc. Key No. 19)	1
17	941588777	Warning Label (FR/SP)	1
18	760746001	Micro Switch	1
19	941588778	On\Off Label	1
20	790009004	Wire Nut	2
21	941588780	Logo Label	1
22	660968001	Screw w/Conical Washer (M4 x 19 mm, T20 Torx)	2
23	660033002	Screw w/External Tooth Washer (M4 x 12 mm, T20 Torx)	2
24	659631001	Hose Clamp on Pump	1
25	316620001	Motor and Pump Assembly	1
26	316757001	Filter Assembly	1
27	659630001	Hose Clamp on Tank	1
28	941263034	4 Gal. Callout Label	1
	Not Shown:		
	998000325	Operator's Manual	

P2806/P2806VNM

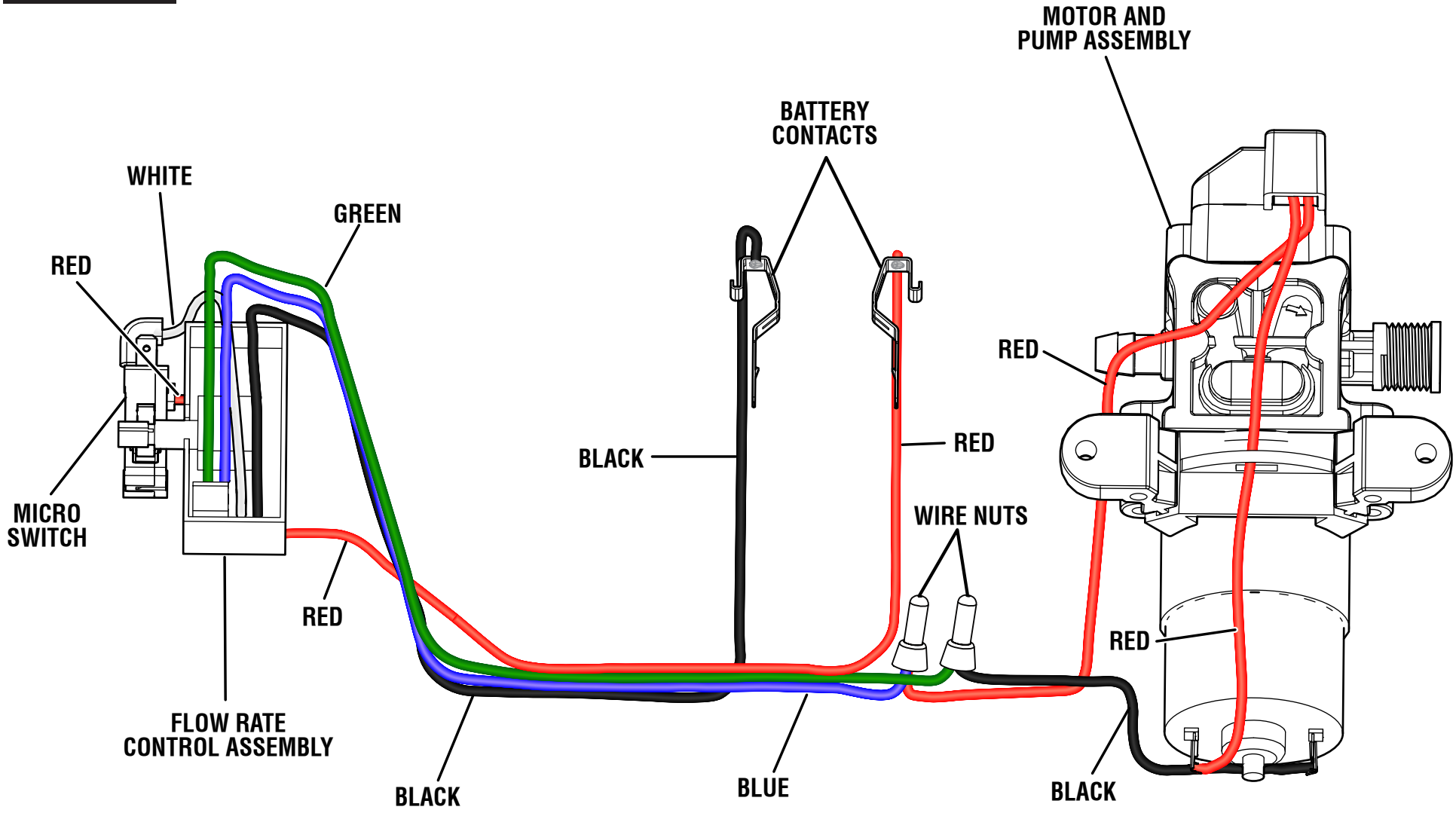

WIRING DIAGRAM